SEMI-AUTOMATIC CUT-OFF SAW MODEL 216

WHIRLWIND

STANDARD EQUIPMENT:

- 10 HP Baldor TEFC Motor 208/230/460/3/60
- 3 Premium V-Belts
- Filter, Regulator, Coalescing Filter w. Gauge
- Magnetic Starter In Nema 12 Box with Low Voltage Controls
- Tempered Chrome-Moly Spindle
- Heavy Steel Spindle Housing
- 4" Cast Aluminum Dust Chute
- Air Supply Lock-Out

OPTIONAL EQUIPMENT:

- 20" A.T.B. or T.C.G. Systi-Matic Blades
- Spray Mist for Metal and Plastic Use
- Electric Delete Credit
- 15 HP Baldor TEFC Motor
- 7 1/2 HP Single Phase Motor

ELECTRICAL (Amps)

Current	230 Volts	460 Volts
Motor Running	26 Amps	13 Amps
Service Current	50 Amps	25 Amps

SPECIFICATIONS:

- Blade Size: 20" x 1" Bore
- Blade Speed: Approx. 3,165 RPM
- Cycle Speed: Up to 40 / Minute
- Air Cylinder: 2" x 12"
- C.F.M. Approx. 1.96 — SCFM 12.65
- Table Height: 36 3/4 Inches
- Floor Space: 26" x 33 1/2 Inches
- Made With Pride in the U.S.A.

CAPACITY:

- 1 x 18, 2 x 16, 3 x 14, 4 x 12
- 5 x 10 and 6 x 8

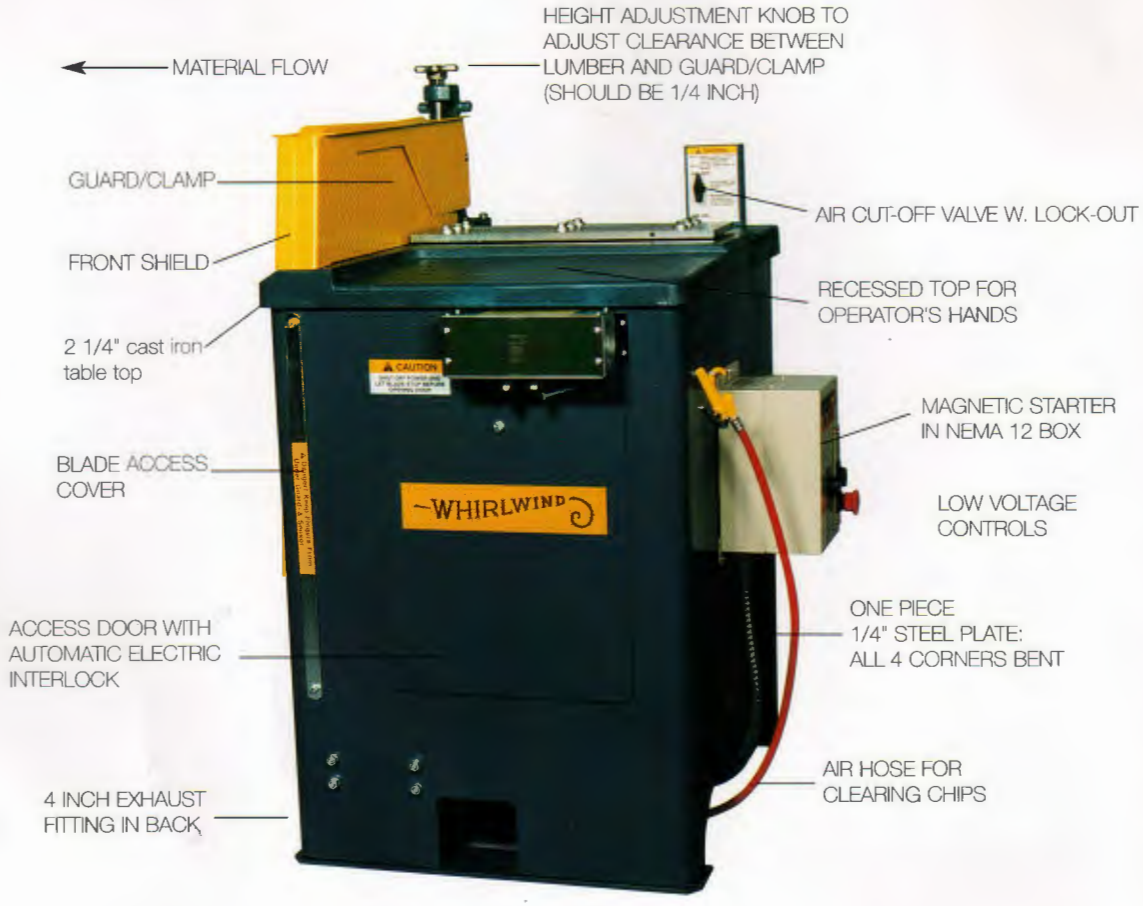

MODEL 216 LEFT HAND SAW

Whirlwind Inc.

4302 Shilling Way Dallas, TX USA 75237
(214) 330-9141 Fax (214) 337-9572
www.whirlwindsaws.com

Whirlwind Model 216 Cut-Off Saw Owner's Manual

Table of Contents

==========

R081303

General Safety Rules for Whirlwind Cut-Off Saws

++

1. READ **AND** UNDERSTAND THE OPERATING INSTRUCTIONS BEFORE OPERATING SAW.
2. If you are not THOROUGHLY familiar with the operation of the equipment you are assigned to, ask your supervisor, instructor or other qualified person for further instruction.
3. **DO NOT** operate any piece of equipment while under the influence of any type of medication, alcohol or drugs.
4. ALWAYS wear eye protection (safety glasses or a face shield).
5. Remove loose clothing, tie, rings, watch and other jewelry, and roll up shirt sleeves prior to operating machinery. **DO NOT** wear gloves while operating machinery.
6. GUARDS must be in place and used at all times.
7. **CAUTION:** Never put hands under yellow guard / clamp.
8. ALWAYS use a "push stick" or air gun to clear away chips and sawdust.
9. AVOID awkward operations and hand operations where a sudden slip or loss of balance could cause your hand to move into the blade area.
10. DO NOT work with lumber that is too large or too small to handle safely.
11. Make all adjustments to machine with air **and** electrical power OFF.
12. DISCONNECT the saw from all power sources (air and electrical) and wait for blade to come to a COMPLETE STOP before making repairs or performing routine maintenance.
13. **NEVER** attempt to free a stalled saw blade without first turning electrical power and air OFF.
14. SHUT OFF all power sources (air and electric) and clean the machine before you leave it.
15. CHECK SAW prior to operation for any damaged parts. Report any problems to your supervisor.
16. **NEVER LEAVE TOOL RUNNING UNATTENDED.** TURN OFF POWER (air and electric). Don't leave saw until it comes to a complete stop.
17. IF IN DOUBT as to what you should do, call WHIRLWIND INC. The telephone number is located on the Air Cut-Off Valve Caution Label.

SAFETY FIRST!

Cover Sheet

Whirlwind Model 216 Pneumatic Cut-Off Saw

==========

Before we get started, we would like to thank you for your purchase of a Whirlwind Model 216 Cut-Off Saw. We realize we have a lot of competition out there and we truly appreciate your business.

In preparing this manual we've tried to provide the answers to most problems that might arise. However, if we've missed something, please give us a call. You should also be aware that an operator's manual has been provided with the machine. We encourage you to have each and every operator spend a few minutes to become familiar with it.

This machine, like every Whirlwind, was tested under power for 4-5 hours prior to shipment. Nothing but the best components and raw materials were used in its construction. Like any quality tool, it must be properly maintained to perform at its best. The operator's manual gives instructions on a few pre-operational tests. These tests should be performed at the beginning of each shift. If any malfunction is noted, it should be corrected immediately.

Numerous safety devices are installed on this machine for the protection of your operators.

These devices must not be removed or tampered with.

CAUTION: NEVER PUT FINGERS UNDER GUARD / CLAMP.

Again, we would like to thank you and welcome you to the large family of Whirlwind customers. We're confident you'll be impressed with our products **and** our service. With proper maintenance, your Whirlwind Model 216 should provide many years of excellent service.

For your records, please fill in the following information:

Date machine purchased _____

Serial number _____

Model number - 216

Set-Up Instructions for Whirlwind Model 216 Cut-Off Saw

==========

1. Position machine and bolt to floor. If infeed and outfeed tables are to be used, these should be aligned with saw fence and table top. When alignment is satisfactory, bolt table legs to floor.

2. Have a certified electrician bring in power, connect machine, and check voltage. Rotation of motor should be checked while electrician is present. This should be done prior to installation of the blade. An arrow indicating proper rotation has been provided on the arbor access cover. All wiring must conform to the National Electric Code, O.S.H.A. and local standards.

Power Requirements

Voltage	230 or	460
Phase	3	3
Service Current (Amps)	50	25
Motor Running Current (Amps)	26	13

3. Connect air line to the air cut-off valve on the machine table top (1/4" female pipe thread). Pressure gauge on the regulator should read 90 PSI.

   CAUTION: DO NOT OPERATE MACHINE WITH LESS THAN 60 PSI.

   This machine is equipped with a filter, regulator and coalescing filter system for incoming air.

DO NOT ADD OIL TO THE AIR SYSTEM.

The air cut-off valve is provided so that when the saw is not in use, this valve can be closed. This cuts off air supply, bleeds system and allows the guard/clamp to lower. Use of this safety feature should be encouraged by all supervisory personnel. A lock-out is also provided on this valve.

4. A 4" dia. exhaust fitting has been provided at the rear of the machine. This fitting allows easy installation into dust collection systems. Adequate hose must be provided to allow for the movement of the guard while the machine is cycling.

5. Install blade on saw. The model 216 uses a 20" x 1" blade. Loosen bottom bolt and remove top bolt from blade cover on front of machine. Loosen bolt on arbor access cover and swing cover clear. Slide blade through the blade access slot and position on arbor. Verify rotation with arrow on arbor access cover. Tighten arbor bolt through arbor access hole. Left hand saws use right hand threads on arbor bolt. Right hand saws use left hand threads. Replace access cover

6. Check work area to be sure it is clear. Turn air cut-off valve to the "ON" position. The guard / clamp will come up quickly.

   CAUTION: DO NOT PUT FINGERS UNDER GUARD / CLAMP.

   Depress the green "START" button on the start / stop switch to turn on the motor. **Making sure that nothing is in the blade path**, depress the palm buttons. Saw should cycle once.

   For cutting, the guard / clamp should be adjusted to clear material by about 1/4 inch. This clearance is adjusted by turning the height adjustment knob. This is the cast aluminum knob located just behind the guard/clamp. Turn the knob clockwise to decrease the size of the opening. To increase the size of the opening, turn the knob counter clockwise. This adjustment is quick and easy when air to the machine is off.

7. After adjusting the guard / clamp height, turn the air cut-off valve to the "ON" position. **Verify there is nothing in the blade path.** Quickly press and release the palm buttons. Guard / clamp should begin to clamp and then quickly retract. If saw does not perform in this manner, call us immediately. Palm buttons must be depressed throughout the cutting cycle. After the cut is completed, you must release the buttons before beginning another cycle.

   CAUTION: DO NOT PUT HANDS ON PALM BUTTONS UNTIL YOU ARE READY TO CUT.

8. Installation of your Whirlwind Model 216 Cut-Off Saw is now complete. Have **every** operator **read and understand** the operator's manual prior to putting this machine into production. Should you have any questions or comments on our products, please give us a call. Our phone number is proudly displayed on the air cut-off valve caution label.

Fence Configurations for Various Material Sizes

Maximum Material Widths Using Various Fence Inserts

Material Thickness	Std Only	Std + SMX-42A	Std + SMX-40A-1	Std + SMX-40A-2	Std + 2 SMX-40A-1	Std. + SMX-40A-1 SMX-40A-2
1"	18	17	16	15	14	13
2"	--	16	15	14	13	12
3"	--	--	14	13	12	11
4"	--	--	--	12	11	10
5"	--	--	--	--	10	9
6"	--	--	--	--	--	8

Note: Various fence combinations will satisfy more than one cut width requirement.

For example, the set-up using the standard fence and one SMX-40A-2 will cut 4 x 12, 3 x 13, 2 x 14 and 1 x 15.

SMX-42A -- 1 inch wide fence insert can only be used in combination with the standard fence (SMX-38A). Two 1/4 - 20 x 1" long socket head cap screws are required for attachment.

SMX-40A-1 -- 2 inch wide fence insert can be used alone, in combination with thestandard fence or combined with the standard fence and another 2 inch or 3 inch insert. Three 3/8 - 16 x 1" long hex head bolts and special thick washers are required to mount each insert.

SMX-40A-2 -- 3 inch wide fence insert can be used alone, in combination with the standard fence or combined with the standard fence and one 2 inch insert. Three 3/8 - 16 x 1" long hex head bolts and special thick washers are required for mounting.

Electrical Problems

1. If reset button must be depressed to re-start machine:

   A. Check wires on magnetic starter.
   B. Check wires to motor.
   C. Check incoming wire connections and voltage.
   D. Verify correct heaters are installed.

2. If machine re-starts by depressing start/stop button:

   A. Check wires to start/stop switch.
   B. Check wires to door interlock switch.
   C. Follow these wires to box and check connections at box.

NOTE:

1. Closely examine all rubber seals for damage while disassembling valves.
2. Repair kits are available for cylinder and pilot valve.
3. **Do Not** allow sawdust or any foreign matter to enter valves or hoses while the machine is being serviced.
4. **DO NOT REMOVE OR TAMPER WITH ANY SAFETY DEVICES.**

Adjustment of Valves for Whirlwind Model 216 Cut-Off Saw

==========

Your Whirlwind model 216 cut-off saw was run-in for 4 - 5 hours and then adjusted to factory specifications. The double palm manifold requires no adjustment and all other valves should be adjusted properly. Adjustments to cycle speed may be made for various applications. This adjustment is outlined below.

CAUTION: CUT OFF ELECTRICITY & LOCK OUT DISCONNECT BOX BEFORE ADJUSTING VALVES.

Cycle speed is adjusted by two allen cap adjustment screws located on the pilot valve. The upper screw adjusts the speed of the cylinder expanding. The lower screw adjusts the speed of the cylinder contracting. The speed of this expansion and contraction should be equal. The model 216 saw should be adjusted to cycle 40 times per minute without lumber under the guard. When the saw is cutting lumber, cycle speed will increase. This is due to the fact that the guard is traveling less distance. Maximum cycle time while cutting is approximately 40 cuts per minute.

NOTE: Exceeding 40 cuts per minute may reduce the life of the machine.

Instructions For Changing V-Belts On Whirlwind Model 216 Cut-Off Saw

==========

CUT OFF ELECTRICITY AND LOCK-OUT DISCONNECT BEFORE WORKING ON SAW.

1. Loosen four bolts which mount the motor to the table top and slide the motor forward.

2. Remove clevis (1000-47) from yoke (1000-4).

3. Slide V-belts around yoke to opposite side of motor.

4. Remove two bolts which mount the left hand bearing hanger (1000-3) to the table top.
   Note: On a right hand saw, remove right hand bearing hanger bolts.

5. Loosen two bolts which mount the right hand bearing hanger.
   Note: On a right hand saw, loosen left hand bearing hanger bolts.

6. Swing left hand bearing hanger down and remove V-belts.

7. Install new V-belts and reassemble. If desired, an extra set of V-belts can be looped around the yoke and tied out of the way. This will make the next belt change much easier.

7. Pulleys must be parallel within 1/32 of an inch.

9. V-belt tightness should be 5/32 inch deflection with three (3) pounds of pressure.

10. **Note:** Improper alignment or tension will result in excessive wear on V-belts or bearings.

Suggested Maintenance:

1. Check filter, regulator, coalescing filter daily for moisture in bowl.

2. Lubricate moving parts with lubricating oil.

3. Check V-belts and tighten if necessary. (See item 9 above.)

4. Keep inside of machine free of excessive sawdust. Special attention should be given to keeping magnetic switch box and palm button manifold clean.

5. Keep saw blades properly sharpened. Carbide tipped blades are highly recommended. These blades may be purchased directly from Whirlwind Inc.

August 23, 1982

Whirlwind Inc. Limited Warranty

==========

Whirlwind Inc. hereby warrants, subject to the conditions set forth below, that it will repair or replace without charge for parts or labor, F.O.B. our factory, any part of the product accompanied by this warranty which proves defective by reason of improper workmanship and / or material within ninety (90) days from the date of the original purchase at retail.

Conditions:

(a) This warranty is extended to the original purchaser only.

(b) This warranty shall not apply to any defects or other malfunctions caused by accident, neglect, misuse, abuse, alteration, modification, unusual physical, environmental or electrical stress, or use contrary to instructions accompanying this product.

(c) This warranty applies only where the purchaser establishes that the product was properly installed, maintained and operated within the limits of normal usage. Any defective part shall be returned promptly to Whirlwind Inc. upon discovery of a defect.

Disclaimer:

This warranty is in lieu of all other warranties of any kind and any other representations or warranties, whether expressed or implied, including any implied warranties of merchantability or fitness for any particular purpose shall not apply, and are disclaimed with respect to the goods sold.

Whirlwind Inc. shall not have any responsibility for loss of use of the product, loss of time, inconvenience, incidental or consequential damages. The liability of Whirlwind Inc. is limited to the cost of repair or replacement of defective parts.

For information concerning warranty service, please contact the distributor from whom the machine was purchased or Whirlwind Inc., 4302 Shilling Way, Dallas, TX U.S.A. 75237 Phone (214) 330-9141 FAX (214) 337-9572.

A 8/13/03 BR

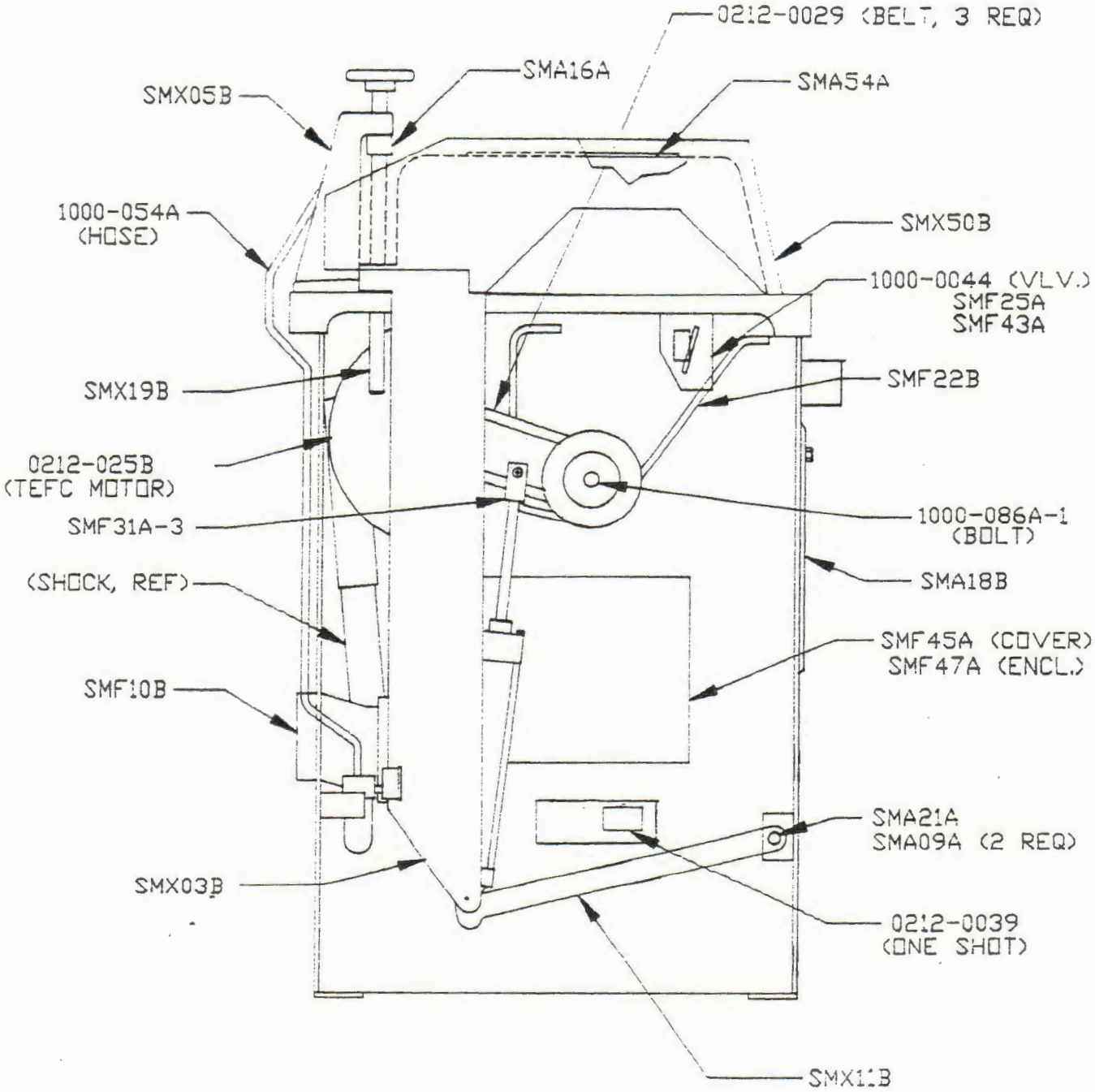

DWG WILKINSON 11/25/92	Whirlwind, Inc. 4302 Shilling Way Dallas, Texas 75237	TITLE SAW ASSEMBLY SHT 2/2	
		A	NO SMX26A

A 8/13/03 BR

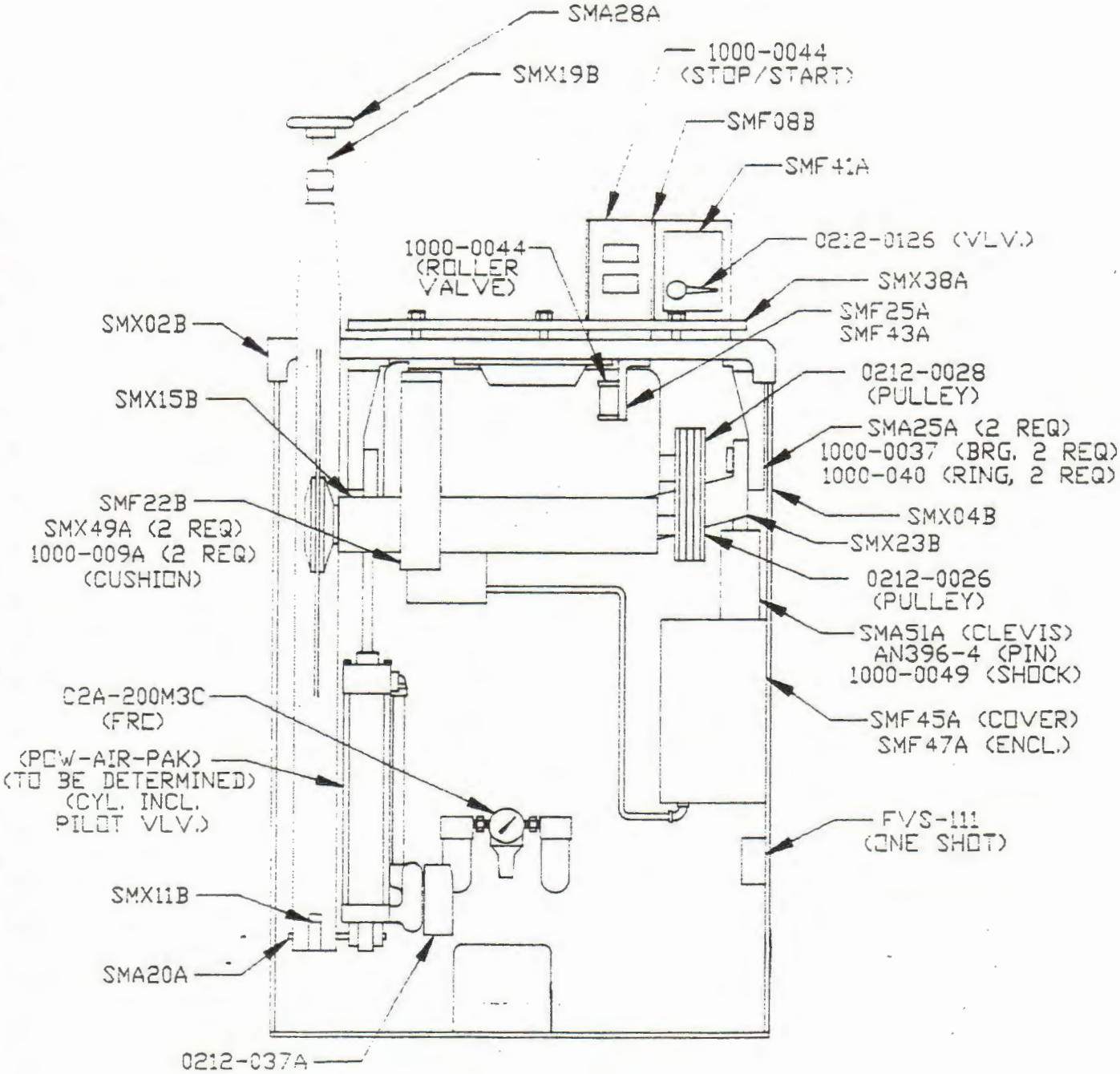

DWG WILKINSON 11/25/'92	Whirlwind, Inc. 4302 Shilling Way Dallas, Texas 75237	TITLE SAW ASSEMBLY SHT 1/2
		A NO SMX26A

Econo-Ram II™ - 1½" through 4" Bore, Lightweight, Non-Lube Pneumatic Cylinder.

Premium Quality and Economy in one.

Lightweight construction and solid Non-Lube design with proven reliability make the Econo-Ram II Cylinder the high performance, long lasting, economical choice for your air cylinder applications.

Hard Anodized Aluminum
Lightweight cylinder body: unique design provides strength and eliminates areas of contamination. 5" through 8" bore have aluminum tube with steel tie rods. See page 18 for construction.

Piston
Aluminum Piston with nylon wear band increases cylinder life, eliminates metal-to-metal contact. Optional magnet piston for use with reed or solid state switches. Anaerobic adhesive is used to permanently lock and seal the piston to the rod

Ports
N.P.T.F. ports are standard.

Check Seal Cushion*

Heads and Caps are Precision, Lightweight Aluminum blocks that are anodized for maximum corrosion resistance

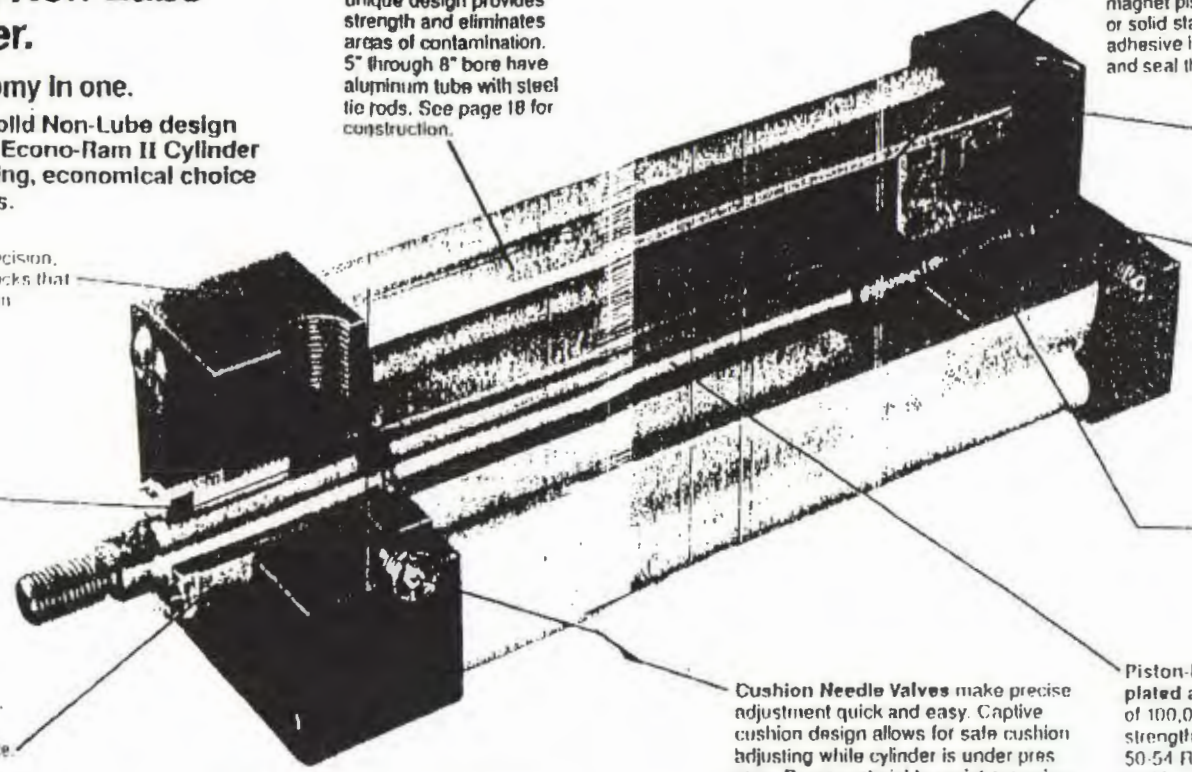

Piston rod lipseal/wiper combination is completely self compensating for zero leakage at all pressures. Keeps pressure in, contamination out. Pneumatic service.

Rounded lip piston seals glide on lubricant film to maximize life.

Rod Gland
Threaded, bronze gland is externally removable without cylinder disassembly for easy maintenance.

Cushion Needle Valves make precise adjustment quick and easy. Captive cushion design allows for safe cushion adjusting while cylinder is under pressure. Brass material to resist corrosion.

Piston-Rod — Hard chrome-plated and polished piston rod of 100,000 psi yield, high tensile strength steel case hardened to 50-54 R_c for reliable performance and long rod seal life, less friction.

Check Seal Cushions*

For Increased Productivity and Maximum Performance

The check seal cushion is new and different from ordinary cushion designs. It combines the sealing capabilities of a lipseal for efficient capture of air for effective cushioning with check valve action for quick stroke reversal.

The design also provides "floating cushions" to assure cushion repeatability and long life. At the start of the stroke in each direction, the check valve design allows full flow to piston face with a minimum pressure drop for maximum power stroke

Additional benefits of the new check seal cushions are increased productivity and top performance for faster cycle time, minimum wear, easy adjustment and low pressure drop.

The basic cushion design is optional and available on either the head end, cap end or both ends without change in envelope or mounting dimensions. A captive cushion adjusting needle is supplied for easy, precise adjustment on all bore sizes.

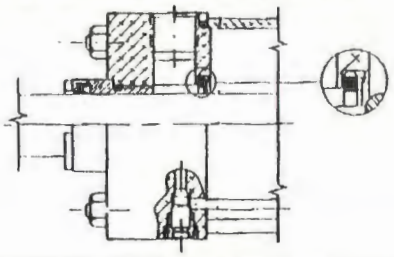

The Econo Ram II piston rod and cylinder barrel surfaces act as highly efficient lubricant reservoirs, maintaining their own lubricant film. Other manufacturers pack grease into grooves and pockets and call them reservoirs. The fact of the matter is that as those grooves empty out over time, grease is being transported out of the cylinder and into the control system components and the atmosphere. The Econo Ram II concept eliminates that problem by maintaining the lubricant film where it belongs: on the seals, bearing surfaces, piston rod and cylinder bore.

The result is a long lasting cylinder with Econo-Ram II quality.

Anatomy of Econo-Ram II Sealing and Lubricant Retention Systems

Rounded sealing lip glides over lubricant film instead of scraping it off. Reduces friction, increases life and eliminates the need for added lubrication.

Increased heel thickness outer lip extension improves stability, resist rolling.

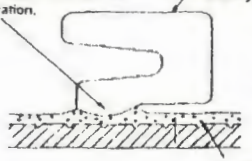

Drawing not to s

High integrity lubricant with suspended PTFE particles

Cylinder Division
500 So. West Road
Des Plaines, IL 60016
708/298-2400

Regional Plants
- Santa Fe Springs, CA 310/698-0985
- Enfield, CT 203/749-2215
- Atlanta, GA 404/349-0563
- Goodland, IN 219/297-3182
- Plymouth, MI 313/455-1700
- Hillsborough, NC (Arcum) 919/732-6183
- Hillsborough, NC 919/732-9371
- Akron, OH 216/253-4500
- Portland, OR 503/285-0984
- Owen Sound, Ont. Can 519/371-2662
- Toronto, Ont. Can 416/255-4567
- Lachine, Quebec (Can. 514/631-3995

Schrader Bellows®

Cylinder Division
500 So. West Road
Des Plaines, IL 60016
708/298-2400

Regional Plants
- Santa Fe Springs, CA 310/698-0985
- Enfield, CT 203/749-2215
- Atlanta, GA 404/349-0563
- Goodland, IN 219/297-3182
- Plymouth, MI 313/455-1700
- Hillsborough, NC (Arcum) 919/732-6183
- Hillsborough, NC 919/732-9371
- Akron, OH 216/253-4500
- Portland, OR 503/285-0984
- Owen Sound, Ont. Can 519/371-2662
- Toronto, Ont. Can 416/255-4567
- Lachine, Quebec (Can 514/631-3995

Schrader Bellows

Schrader Bellows®

Pneumatic Division North America
Richland, Michigan 49083

Installation and Service Instructions: 2FR100CSB

06E, 07E, 12E
Filter/Regulator Series

ISSUED: November, 1996
Supersedes: May, 1995
ECN# P25905

⚠ WARNING

To avoid unpredictable system behavior that can cause personal injury and property damage:

- **Disconnect air supply and depressurize all air lines connected to this product before installation, servicing, or conversion.**
- **Operate within the manufacturer's specified pressure, temperature, and other conditions listed on these instructions.**
- **Medium must be moisture-free if ambient temperature is below freezing.**
- **Service according to procedures listed in these instructions.**
- **Installation, service, and conversion of these products must be performed by knowledgeable personnel who understand how pneumatic products are to be applied.**
- **After installation, servicing, or conversion, air supply should be connected and the product tested for proper function and leakage. If audible leakage is present, or the product does not operate properly, do not put into use.**
- **Warnings and specifications on the product should not be covered by paint, etc. If masking is not possible, contact your local representative for replacement labels.**

Introduction

Follow these instructions when installing, operating, or servicing the product.

Application Limits

These products are intended for use in general purpose compressed air systems only.

Operating Inlet Pressure:

	kPa	psig	bar
with Polycarbonate Bowl	1000	150	10.3
with Metal Bowl	1700	250	17.0

Note: The maximum recommended pressure drop for a particulate filter is 70 kPa (10 psig, 0.7 bar).

Ambient Temperature Range:

with Polycarbonate Bowl	0°C to 52°C (32°F to 125°F)
with Metal Bowl	0°C to 80°C (32°F to 175°F)

Symbols

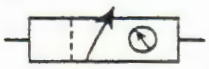

Filter/Regulator
06E & 07E

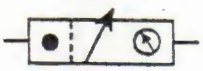

Filter/Regulator 12E
(Coalescing Element)

Installation

1. The filter/regulator should be installed with reasonable accessibility for service whenever possible – repair service kits are available. Keep pipe or tubing lengths to a minimum with inside clean and free of dirt and chips. Pipe joint compound should be used sparingly and applied only to the male pipe – never into the female port. Do not use Teflon[1] tape to seal pipe joints – pieces have a tendency to break off and lodge inside the unit, possibly causing malfunction. Also, new pipe or hose should be installed between the filter/regulator and equipment being protected.
2. The upstream pipe work must be clear of accumulated dirt and liquids.
3. Select a filter/regulator location as close as possible to the equipment being protected.
4. Install filter/regulator so that air flows in the direction of arrow on body.
5. Install filter/regulator vertically with the bowl drain mechanism at the bottom. Free moisture will thus drain into the sump ("quiet zone") at the bottom of the bowl.
6. Gauge ports are located on both sides of the filter/regulator body for your convenience. It is necessary to install a gauge or socket pipe plugs into each port during installation.

[1] Trademark E.I. Du Pont de Nemours & Co.

Operation

1. Both free moisture and solids are removed automatically by the filter. Units with coalescing elements (e.g. 12E series) also remove oil. For coalescing units, a 5 micrometer pre-filter is recommended to protect and prolong the life of the coalescent filter element.
2. Manual drain filters must be drained regularly before the separated moisture and oil reaches the bottom of the baffle or end cap.
3. The filter element should be removed and replaced when pressure differential across the filter is 69 kPa (10 psig).
4. Before turning on the air supply, turn the knob counterclockwise until compression is released from the pressure control spring. Then turn knob clockwise and adjust regulator to desired downstream pressure. This permits pressure to build up slowly in the downstream line.
5. To decrease regulated pressure settings, always reset from a pressure lower than the final setting required. Example, lowering the secondary pressure from 550 to 410 kPa (80 to 60 psig) is best accomplished by dropping the secondary pressure to 350 kPa (50 psig), then adjusting upward to 410 kPa (60 psig).
6. When desired secondary pressure settings have been reached, push the knob down to lock this pressure setting.

Service

⚠ **Caution: Disconnect or shut off air supply and exhaust the primary and secondary pressures before servicing unit. Turning the adjusting knob counterclockwise does not vent downstream pressure on non-relieving regulators. Downstream pressure must be vented before servicing regulator.**

Note: Grease packets are supplied with kits for lubrication of seals. Use only mineral based grease or oils. Do not use synthetic oils such as esters. Do not use silicones.

Note: After servicing unit, turn on air supply and adjust regulator to the desired downstream pressure. Check unit for leaks. If leakage occurs, do not operate - conduct repairs and retest.

Servicing Filter Element -

A. 06E & 07E Units (Refer to Figure 1.)

1. Unscrew the bottom threaded collar and remove bowl.
2. Unscrew the baffle and then remove element.
3. Clean all internal parts and bowl before reassembling. See polycarbonate bowl cleaning section. IMPORTANT: The 06E Filter/Regulator will not operate properly if the deflector (or rubber spacer if using an 06E adsorber) is not installed properly. The 06E deflector (or rubber spacer) must be installed between the filter stem and the filter body.
4. Install new element.
5. Attach baffle and finger tighten firmly.
6. Replace bowl seal. Lightly lubricate new seal to assist with retaining it in position.
7. Install bowl into body and tighten collar; torque:
   06E collar - from 3.2 to 3.6 N•m (28 to 32 in-lbs),
   07E collar - from 5.4 to 5.9 N•m (48 to 52 in-lbs).

⚠ WARNING

FAILURE OR IMPROPER SELECTION OR IMPROPER USE OF THE PRODUCTS AND/OR SYSTEMS DESCRIBED HEREIN OR RELATED ITEMS CAN CAUSE DEATH, PERSONAL INJURY AND PROPERTY DAMAGE.

This document and other information from The Company, its subsidiaries and authorized distributors provide product and/or system options for further investigation by users having technical expertise. It is important that you analyze all aspects of your application, including consequences of any failure and review the information concerning the product or system in the current product catalog. Due to the variety of operating conditions and applications for these products or systems, the user, through its own analysis and testing, is solely responsible for making the final selection of the products and systems and assuring that all performance, safety and warning requirements of the application are met.

The products described herein, including without limitation, product features, specifications, designs, availability and pricing, are subject to change by The Company and its subsidiaries at any time without notice.

EXTRA COPIES OF THESE INSTRUCTIONS ARE AVAILABLE FOR INCLUSION IN EQUIPMENT / MAINTENANCE MANUALS THAT UTILIZE THESE PRODUCTS. CONTACT YOUR LOCAL REPRESENTATIVE.

B. 12E Units (Refer to Figure 2.)

1. Hold bowl collar stationary while unscrewing and removing bowl.
2. Unscrew end cap and then remove element. (Do not remove threaded rod.)
3. Clean all internal parts and bowl before reassembling.
4. Install new element.
5. Attach end cap and finger tighten firmly.
6. Replace bowl seal. Lightly lubricate new seal to assist with retaining it in position.
7. Thread bowl into collar; hand tighten until bowl stops against collar.

Servicing Regulator -

A. 06E & 07E Units - (Refer to Figure 1.)

1. Disengage the adjusting knob by pulling upward. Turn adjusting knob counterclockwise until the compression is released from the pressure control spring.
2. Remove the bonnet and bowl assemblies by unscrewing the two threaded collars.
3. Remove diaphragm assembly from bonnet assembly.
4. Remove filter stem, filter element, poppet assembly, poppet return spring, (seat) insert and its o-rings.
5. Clean and carefully inspect parts for wear or damage. If replacement is necessary, use parts from service kits. Clean bowl. See polycarbonate bowl cleaning section.
6. Lubricate o-ring and vee packing seals with grease found in service kits.
7. Install poppet return spring, poppet assembly, (seat) insert and its o-rings, and filter stem. IMPORTANT: The 06E Filter/Regulator will not operate properly if the deflector (or rubber spacer if using an 06E adsorber) is not installed properly. The 06E deflector (or rubber spacer) must be installed between the filter stem and filter body.
8. Install filter element and firmly tighten baffle onto the filter stem.
9. Install diaphragm assembly into bonnet assembly. Assemble bonnet assembly to body and tighten threaded collar from 5.4 to 5.9 N•m (48 to 52 in-lbs).
10. Install bowl into body and tighten collar; torque:
    06E collar - from 3.2 to 3.6 N•m (28 to 32 in-lbs),
    07E collar - from 5.4 to 5.9 N•m (48 to 52 in-lbs).

B. 12E Units - (Refer to Figure 2.)

1. Disengage the adjusting knob by pulling upward. Turn adjusting knob counterclockwise until the compression is released from the pressure control spring.
2. Remove the bonnet assembly by unscrewing its threaded collar.
3. Remove the bottom collar and bowl as an integral unit. Note: The reverse flow adapter and element assembly should remain in proper alignment with the collar; they are held in place by the o-ring between the adapter and the collar.
3. Remove diaphragm assembly from bonnet assembly.
4. Remove poppet assembly, poppet return spring, (seat) insert and its o-rings.
5. Clean and carefully inspect parts for wear or damage. If replacement is necessary, use parts from service kits.
6. Lubricate o-ring and vee packing seals with grease found in service kits.
7. Install poppet return spring, poppet assembly, (seat) insert and its o-rings.
8. Install diaphragm assembly into bonnet assembly. Assemble bonnet assembly to body and tighten threaded collar from 5.4 to 5.9 N•m (48 to 52 in-lbs).
9. Install bottom collar and bowl subassembly into body. Tighten collar from 5.4 to 5.9 N•m (48 to 52 in-lbs) of torque.

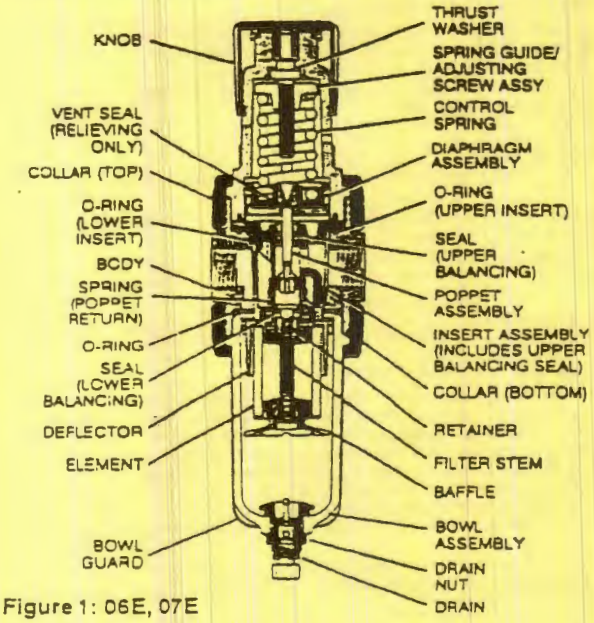

Figure 1: 06E, 07E

Safety: Polycarbonate Bowls

⚠ CAUTION

Polycarbonate bowls, being transparent and tough, are ideal for use with Filters and Lubricators. They are suitable for use in normal industrial environments, but should not be located in areas where they could be subjected to direct sunlight, an impact blow, nor temperatures outside of the rated range. As with most plastics, some chemicals can cause damage. Polycarbonate bowls should not be exposed to chlorinated hydrocarbons, ketones, esters and certain alcohols. They should not be used in air systems where compressors are lubricated with fire-resistant fluids such as phosphate ester and di-ester types.

Metal bowls are recommended where ambient and/or media conditions are not compatible with polycarbonate bowls. Metal bowls resist the action of most such solvents, but should not be used where strong acids or bases are present or in salt laden atmospheres. Consult the factory for specific recommendations where these conditions exist.

TO CLEAN POLYCARBONATE BOWLS USE MILD SOAP AND WATER ONLY! DO NOT use cleansing agents such as acetone, benzene, carbon tetrachloride, gasoline, toluene, etc., which are damaging to this plastic.

Bowl guards are recommended for added protection of polycarbonate bowls where chemical attack may occur.

⚠ WARNING

To avoid polycarbonate bowl rupture that can cause personal injury or property damage, do not exceed bowl pressure or temperature ratings. Polycarbonate bowls have a 150 psig (1030 kPa) pressure rating and a maximum temperature rating of 52°C (125°F).

MAINTENANCE SERVICE KITS	06E 1/4", 3/8" & 1/2"	07E 3/8", 1/2" & 3/4"	12E 3/8", 1/2" & 3/4"
Element Kits			
5 Micron	PS702SB	PS802SB	N/A
40 Micron	PS701SB	PS801SB	N/A
Grade 6	N/A	N/A	PS884SB
Grade 10	N/A	N/A	PS885SB
Relieving Regulator Repair Kit	PS710SB	PS810SB	PS886SB
Non-Relieving Regulator Repair Kit	PS711SB	PS811SB	PS887SB

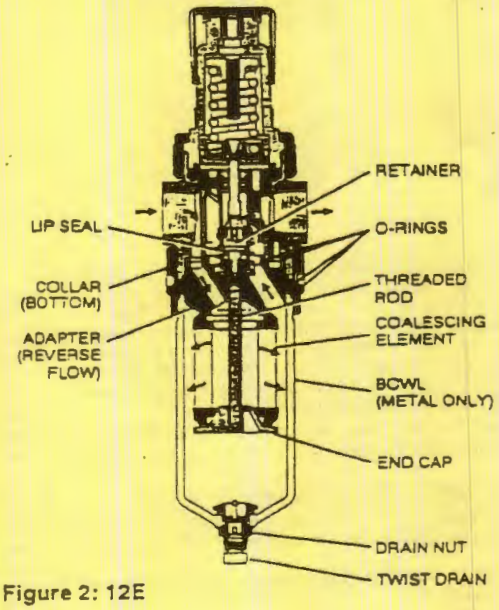

Figure 2: 12E

Parker Pneumatic

Pneumatic Division North America
Richland, Michigan 49083

Installation & Service Instructions:
2C100EP

1/8", 1/4" & 3/8" Economy
1/4", 3/8" & 1/2" Compact
3/8", 1/2" & 3/4" Standard
Coalescing Filter

ISSUED: August, 2000
Supersedes: February, 2000

ECN# P27805

⚠ WARNING

To avoid unpredictable system behavior that can cause personal injury and property damage:

- Disconnect electrical supply (when necessary) before installation, servicing, or conversion.
- Disconnect air supply and depressurize all air lines connected to this product before installation, servicing, or conversion.
- Operate within the manufacturer's specified pressure, temperature, and other conditions listed in these instructions.
- Medium must be moisture-free if ambient temperature is below freezing.
- Service according to procedures listed in these instructions.
- Installation, service, and conversion of these products must be performed by knowledgeable personnel who understand how pneumatic products are to be applied.
- After installation, servicing, or conversion, air and electrical supplies (when necessary) should be connected and the product tested for proper function and leakage. If audible leakage is present, or the product does not operate properly, do not put into use.
- Warnings and specifications on the product should not be covered by paint, etc. If masking is not possible, contact your local representative for replacement labels.

⚠ CAUTION

Polycarbonate bowls, being transparent and tough, are ideal for use with Filters and Lubricators. They are suitable for use in normal industrial environments, but should not be located in areas where they could be subjected to direct sunlight, an impact blow, nor temperatures outside of the rated range. As with most plastics, some chemicals can cause damage. Polycarbonate bowls should not be exposed to chlorinated hydrocarbons, ketones, esters and certain alcohols. They should not be used in air systems where compressors are lubricated with fire-resistant fluids such as phosphate ester and diester types.

Metal bowls are recommended where ambient and/or media conditions are not compatible with polycarbonate bowls. Metal bowls resist the action of most such solvents, but should not be used where strong acids or bases are present or in salt laden atmospheres. Consult the factory for specific recommendations where these conditions exist.

TO CLEAN POLYCARBONATE BOWLS USE MILD SOAP AND WATER ONLY! DO NOT use cleansing agents such as acetone, benzene, carbon tetrachloride, gasoline, toluene, etc., which are damaging to this plastic.

Application Limits

These products are intended for use in general purpose compressed air systems only.

Maximum Recommended Pressure Drop:

	kPa	PSIG	bar
Coalescing Filter	70	10	0.7

With Polycarbonate Bowl

	kPa	PSIG	bar
Operating Pressure Maximum	1000	150	10.3

Operating Temperature Maximum 52°C (125°F)
Operating Temperature Minimum 0°C (32°F)

With Metal Bowl

	kPa	PSIG	bar
Operating Pressure Maximum	1700	250	17.0

Operating Temperature Maximum 80°C (175°F)
Operating Temperature Minimum 0°C (32°F)

05 / 15 Series With Metal Bowl and Auto Drain

	kPa	PSIG	bar
Operating Pressure Maximum	1000	150	10.3

Operating Temperature Maximum 80°C (175°F)
Operating Temperature Minimum 0°C (32°F)

ANSI Symbols

Coalescing
w/Manual Drain

⚠ WARNING

FAILURE OR IMPROPER SELECTION OR IMPROPER USE OF THE PRODUCTS AND/OR SYSTEMS DESCRIBED HEREIN OR RELATED ITEMS CAN CAUSE DEATH, PERSONAL INJURY AND PROPERTY DAMAGE.

This document and other information from Parker Hannifin Corporation, its subsidiaries and authorized distributors provide product and/or system options for further investigation by users having technical expertise. It is important that you analyze all aspects of your application, including consequences of any failure and review the information concerning the product or systems in the current product catalog. Due to the variety of operating conditions and applications for these products or systems, the user, through its own analysis and testing, is solely responsible for making the final selection of the products and systems and assuring that all performance, safety and warning requirements of the application are met.

The products described herein, including without limitation, product features, specifications, designs, availability and pricing, are subject to change by Parker Hannifin Corporation and its subsidiaries at any time without notice.

EXTRA COPIES OF THESE INSTRUCTIONS ARE AVAILABLE FOR INCLUSION IN EQUIPMENT / MAINTENANCE MANUALS THAT UTILIZE THESE PRODUCTS. CONTACT YOUR LOCAL REPRESENTATIVE.

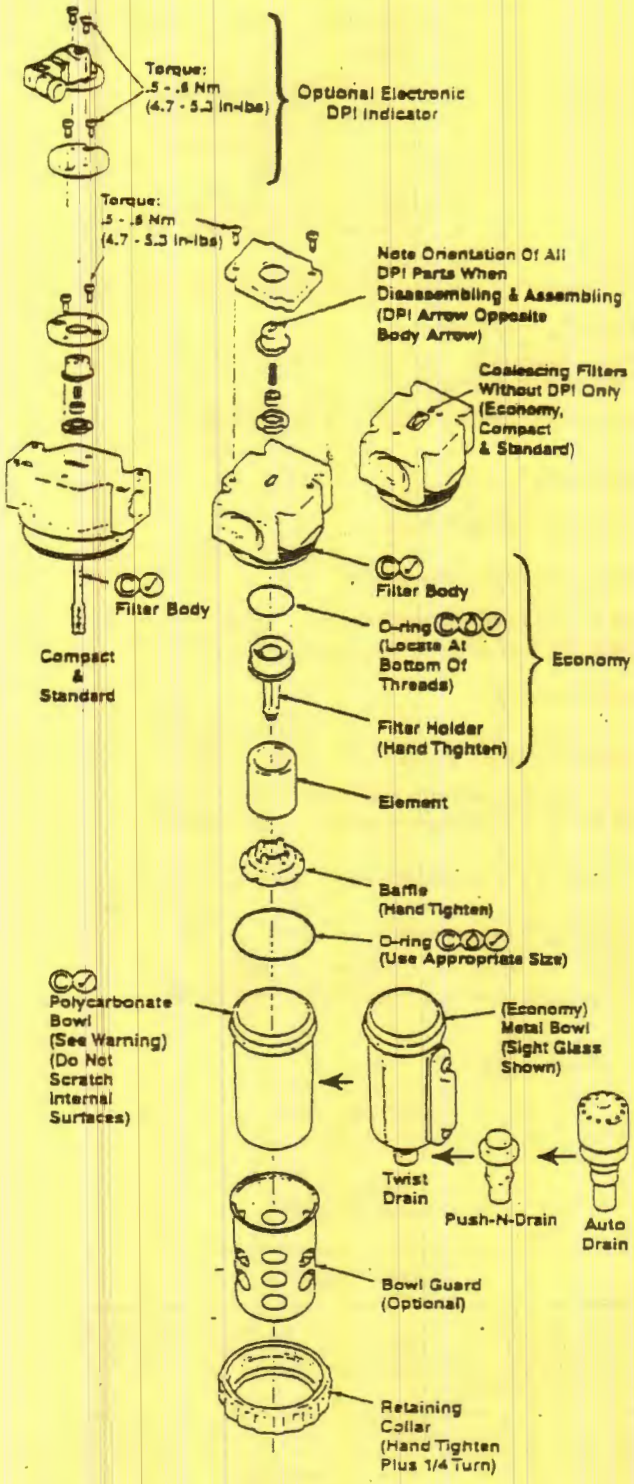

Lightly grease with provided lubricant.

Inspect for nicks, scratches, and surface imperfections. If present, reduced service life is probable and future replacement should be planned.

Clean with lint-free cloth.

Installation

1. The filter should be installed with reasonable accessibility for service whenever possible – repair service kits are available. Keep pipe or tubing lengths to a minimum with inside clean and free of dirt and chips. Pipe joint compound should be used sparingly and applied only to the male pipe – never into the female port. Do not use PTFE tape to seal pipe joints – pieces have a tendency to break off and lodge inside the unit, possibly causing malfunction. Also, new pipe or hose should be installed between the filter and equipment being protected.
2. The upstream pipe work must be clear of accumulated dirt and liquids.
3. Select a filter location as close as possible to the equipment being protected and upstream of any pressure regulator.
4. Install filter so that air flows in the direction of arrow on body.
5. Install filter vertically with bowl drain mechanism at the bottom. Free moisture will thus drain into the sump "quiet zone" at the bottom of the bowl.

Operation and Service

1. Both free moisture and solids are removed automatically by the filter. There are no moving parts.
2. Manual drain filters must be drained regularly before the separated moisture and oil reaches the bottom of the lower baffle.
3. The coalescing filter element should be removed and replaced when pressure differential across the filter is 10 psid. The differential pressure indicator, located on top of the filter body, gives a visual indication of the pressure differential across the filter element. Change the filter element when half or more of the orange piston is above the retaining ring when air is flowing. For units without a differential pressure indicator, pressure differential gauges should be used to determine when the maximum recommended pressure differential has been reached.
4. Shut off air supply and depressurize the unit, before servicing.
5. After servicing, apply system pressure and check for air leaks. If leakage occurs, Do Not Operate — conduct servicing again.

Service Kits Available

Description	Economy 1/8", 1/4" & 3/8"	Compact 1/4", 3/8" & 1/2"	Standard 3/8", 1/2" & 3/4"
Element Kits*			
Grade 6	PS924P	PS724P	PS824P
Grade 10	PS930P	PS730P	PS830P
DPI Repair Kit	PS781P	PS781P	PS781P
Electronic DPI Kit	PS965P	PS764P	PS764P

* Element kits include body / bowl seal.

SAFETY GUIDES

for the operation of
CARBIDE TIPPED SAW BLADES

Read Completely Before Attempting To Operate Carbide Tipped Saw Blades

This leaflet of safety and operating instructions is not intended to be and is not totally comprehensive; that is, it does not, and cannot, cover every possible safety problem which may arise in using specialized and standard tooling on varying machines and applications. This leaflet is rather intended to generally describe many of the basic safety and operating procedures which should be followed, and to describe the types of safety considerations which should be considered in operating cutting tools.

None of the statements or information presented in this leaflet should be interpreted to imply any warranty or safety protection.

The drawings do not depict any particular design, type, or size of tools, equipment or machines. The drawings are illustrative only and are not to be construed to establish any exact mode, method or procedure.

All Federal and State laws and regulations having jurisdiction covering the safety requirements of cutting tools at the point of usage take precedence over the statements and information presented in this leaflet. Users of cutting tools must, of course, adhere to all such regulations. As an aid to cutting tool users a number of such regulations are listed below. The list does not include all regulations that may apply:

1. The Federal Register dated June 27, 1974, Dept. of Labor, Office of Safety and Health Administration (The OSHA Act)
2. American National Standards Institute, 01.1-1975 (Safety Regulations for Woodworking Machinery)
3. American National Standards Institute, 02.1-1969 (Safety Requirements for Sawmills)
4. American National Standards Institute, P1.1-1969 (Safety Requirements for Pulp, Paper and Paperboard Mills)
5. Other ANSI, State and/or Federal Codes and Regulations which may apply in your operation

SAFETY RULES WHICH APPLY TO THE OPERATION OF ALL CARBIDE TIPPED CUTTING TOOLS

1. Always inspect the cutting tool completely before mounting. Never attempt to operate a tool which has chipped or bent teeth or cutting edges or teeth that are not sharp. You must be familiar with normal wear conditions for the type of tooling to be used. The tool must be completely clean to allow proper visual inspection.

2. Do not attempt to operate cutting tools or machinery with which you are not familiar or have not received operational training—**get assistance** from your supervisor, his designated representative or a trainer who is familiar and properly trained and experienced on the machine to insure your safety. Become completely familiar with all of the machinery manufacturer's written instructions, guides and manuals before operating machine. You must use and be familiar with all controls, safety devices and emergency stop mechanisms to operate a machine safely.

3. Never operate a cutting tool that is not properly aligned to the direction of feed. Do not allow sideward, twisting or other than forward pressure on the cutting tool in feeding material into a cut.

4. Make sure the tool is mounted to rotate in the proper direction before cutting any material. The tool must rotate against, rather than with, the direction of feed on all hand feed machines. Do not climb on hand feed machines.

5. Do not cut materials of a type, hardness[1] or density[2] other than that which the cutting tool was designed to cut. Never attempt to cut materials with a tool unless you have personally checked with your supervisor to make sure the cutting tool was designed for the specific type of material you wish to cut, and for the depth of cut desired. This is particularly important when attempting to cut "stacked" material, i.e., cutting more than one piece at a time.

6. Never force-feed materials into a cutting tool such that it causes the tool or machine motor to slow down below operating speeds. A safe and proper cutting operation will not require much force in feeding material. If material begins to "ride up" on the cutting tool, or requires undue pressure to feed the material into the tool, or if undue vibration is experienced, do not continue the cut—turn off all power and correct the condition.

7. Keep body and clothing well clear of all cutting tools and other moving parts while the machine is in operation. Use work holding fixtures and mechanical feed devices in all possible cases. When cutting material of such size, shape or type that it necessitates close approximation to the cutter and mechanical feed mechanisms cannot be used, use a wood "push stick" to feed the material so that no part of your body or clothing comes close to the cutting tool.

8. Never attemp to clean a cutting tool or clear pieces of material from the cutting area while machine power is "on" or when cutting tools, material or any part of the machine is moving. Allow cutter rotation to stop by itself, or by use of a brake if supplied on the machine. Never attempt to stop or slow a rotating cutting tool by applying a hand-held or any other object to the cutter, arbor, spindle or drive as a brake.

9. Do not place your body in the rotational path of a cutting tool unless absolutely necessary, and then only if there is a complete and adequate barrier between you and the cutting tool. Remember that carbide tips are very hard and, therefore, brittle. The tips can break away under incorrect side thrust or twisting forces, or if foreign material is allowed to contact the tips. An operator can reduce the danger of being hurt by a "kickback" of the material if he always stands **beside** the material he is feeding into the machine rather than in back of it.

10. Never leave machines unattended while cutting tools are still rotating or any part of the machine or material is moving.

11. Never operate a machine without using all of the hoods, guards, hold-downs and safety devices for the machine being operated.

12. Machines must be maintained to the manufacturer's standards and current safety standards.

13. Always wear safety glasses or face shield to completely protect your eyes when operating cutting tools.

1. Hardness is the resistance of a material to being cut or the strength of a material to resist tearing or breaking.
2. Density is the compactness of a material compared to its volume.

CIRCULAR SAW BLADES AND SAW MACHINE TOOLS MOUNTING INSTRUCTIONS

1. **TURN OFF AND LOCK OUT ALL MACHINE POWER.** Clean the saw arbor, saw collars, sleeve and arbor nut. Remove nicks and burrs by very lightly honing any nicked or burred area. (Do not use coarse files or abrasives).

2. **WITH ALL MACHINE POWER OFF AND LOCKED OUT**, pull and push on the machine arbor sideways in and out by hand (without rotating the arbor). There should be no feeling of movement. Next, rotate the arbor by hand. If the bearings are in proper condition, the arbor should turn freely with no sticking or rubbing. To check the arbor, set up a dial indicator as shown in Fig. 1. The arbor should run true within the motor manufacturer's specifications. Set the dial indicator to bear on the fixed collar of the arbor and turn the arbor (Fig. 2). The collar should run true within the machine manufacturer's specifications.

Fig. 1

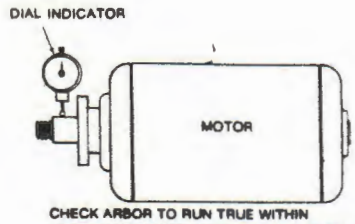

CHECK ARBOR TO RUN TRUE WITHIN MOTOR MANUFACTURERS SPECIFICATIONS

Fig. 2

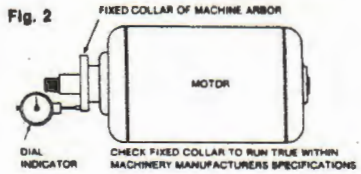

3. **WITH ALL POWER OFF AND LOCKED OUT**, align the saw blade with the direction of feed. A method of checking alignment is to mount a flat ground plate of 10 or 12 inches diameter by ¼ inch thick on the saw arbor in the same manner as a saw blade (see Fig. 3). Set up a dial indicator so it can be moved by hand along the guide rail or feed mechanism. Position the dial indicator so it can traverse across the plate either above or below the mounting collars. Set the dial indicator to zero at the leading edge of the plate (Position A, Fig. 3) and move it across the plate to the trailing edge (Position B, Fig 3).

Fig. 3

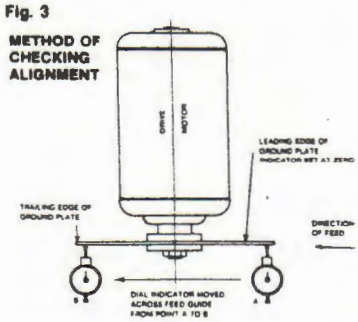

PROFIT THROUGH AMERICAN TECHNOLOGY
WOOD MACHINERY MANUFACTURERS OF AMERICA
Cutting Tool Manufacturers' Division

hand so that point A is moved to point B when reading the indicator. Any deviation in angularity between the saw blade and the direction of feed should be maintained within the machine manufacturer's recommendations. On double cut-off and panel trim machines any slight angularity in alignment should be controlled so that the trailing edge of the saw blades do not re-cut the material.

4. WITH ALL MACHINE POWER OFF AND LOCKED OUT, inspect the saw blade before mounting. The bore (center hole) must be the correct size and fit snugly. Do not force a saw or other type of tool on an arbor. Do not tighten mounting screws unequally, or use incorrectly fitted keys. Incorrect mounting of saws or other tools can cause tool breakage and create dangerous operating conditions. Never mount a saw blade with a damaged (deeply scored or out of round) bore or arbor. Inspect the teeth carefully. Do not mount blades with damaged bodies, dull or damaged (bent or chipped) teeth. Never use anything other than accurate metal shims or spacers if saw blades have to be positioned on the arbor. Never use shims to "wobble" a saw blade.[3] Be sure that all saw collars used match exactly in diameter. Closely check to see that the arbor nut threads are not worn and the wrench surfaces of the arbor nut are not rounded off.

5. WITH ALL MACHINE POWER OFF AND LOCKED OUT, mount the saw blade on the arbor making sure that the saw blade is turning in the correct rotation and that the arbor nut tightens in a direction opposite to the blade rotation (See Fig. 4A & 4B). Unless the

Fig. 4A

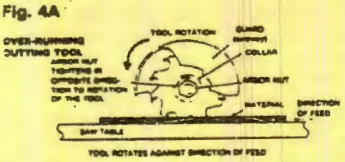

Fig. 4B

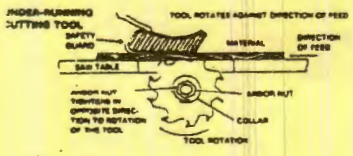

machine is specifically designed for such cutting, never mount saw machine tools to "climb cut" (teeth cutting in the same direction of feed) on manually fed machines. Never use saw blades on operations for which they were not designed; for example, do not use rip design blades to cut across the grain, etc.

CIRCULAR SAW BLADES AND SAW MACHINE TOOLS START-UP PROCEDURES

1. TURN OFF AND LOCK OUT ALL MACHINE POWER. Never assume previously set machine or tool conditions to be correct. Be sure that locked on the arbor (See Fig. 4A & 4B), turns freely (no foreign objects in tool rotation path) and is properly positioned for the cutting operation required (See Fig. 3). Check to see that the cutting tool is not dull or damaged. Check to see that the body of the saw blade is not cracked.[4] Take special precaution to check "stacked cutters" to be sure that all bolts, pins and threaded parts are not worn or damaged, and are properly mounted. Be sure that hubs on all "split" circular tools are properly fitted and pinned and that the locking collars are in place and fit properly. Do not use locking collars that are not matched to the "split tool." Split collars on split tools are not recommended.

2. WITH ALL MACHINE POWER OFF AND LOCKED OUT insure that you are not attempting to operate tools that do not conform to the machine manufacturer's machine load specifications in either size or weight, or that do not mount according to the machine design limitations. Operate saw machine tools only on the type of materials, cutting loads and operation applications for which the tools were designed. (If you don't know this information, ask your supervisor.) Do not operate saw blades or saw machine tools in excess of the machine or tool manufacturer's specifications, or current applicable OSHA standards, or in excess of 18,000 sfm (surface feet per minute).[5] (See Charts A and B following).

3. WITH ALL MACHINE POWER OFF AND LOCKED OUT position the cutting tool, material guides and material hold-downs so that the material to be cut is fully supported. This will insure there will be minimal material vibration. Next, follow the machine manufacturer's instructions to mount all guards over the tools such that the guards are close to, but properly clear, the material being cut. Mount and activate all of the machine safety devices such as anti-kickback mechanisms, spreaders, dust hoods and safety switches. Make sure all personnel and all loose or foreign objects are clear of the machine and cutting tools.

4. TURN ON MACHINE POWER, start the tool rotation slowly before feeding material. This is done by "jogging" (that is, pressing the start button and immediately after that pressing the stop button). At a safe distance, observe the operating condition of the tools (by sight and sound) as they rotate slowly. Next, **TURN ALL MACHINE POWER OFF AND LOCKED OUT,** wait until all cutting tools stop rotating by themselves (do not attempt to stop their rotation yourself unless a brake is specifically provided for that purpose on the machine), and make any necessary corrections. Go through all steps noted in paragraph 3, just above, before you **TURN THE MACHINE POWER ON.** Press the start button and allow the machine to operate at before feeding material.

OPERATING SPEEDS FOR CARBIDE TIPPED CIRCULAR SAW BLADES

Carbide tipped circular saw blades of the types commonly used in the machining of materials typical of the toughness and density range of most wood species, composition boards, medium hard plastics, and the softer non-ferrous metals must never be operated in excess of the machinery or tool manufacturer's recommendations, or current applicable OSHA standards, or in excess of 18,000 sfm (surface feet per minute) whichever is lowest. Surface feet per minute (sfm) refers to the peripheral or rim speed of a cutting tool, that is, the speed at which the outer cutting teeth are rotating when the tool is at full speed. This speed increases as the tool diameter and/or motor arbor or spindle rpm increase. The maximum speed of 18,000 sfm is allowable only when the machinery being used is in excellent operating condition and is excellently maintained. When using older or worn machinery, or when cutting materials of an unusual toughness[6] or density[7] the surface feet per minute or material feed rate, or both, should be reduced to speeds where the tool cuts easily and freely without excessive vibration or high tooth impact shock. Most woods, plastics and the medium-hard non-ferrous metals will cut better with longer tool life at surface feet per minute ranging from 8,000 sfm to 18,000 sfm, depending on the hardness and machining characteristics of the material being cut. As the rim speed (surface feet per minute) of a circular saw blade is decreased, feed rates must be decreased accordingly to prevent the forcing of material into the cutting tool and overloading of the cutting teeth.

The method of determining the surface feet per minute (sfm) of a rotary cutting tool is as follows:

.26 x D x RPM = SFM
where D = diameter of the tool in inches
RPM = rotating speed, in revolutions per minute
SFM = rim speed, in surface feet per minute
.26 = this number is used to convert the tool circumference from inches to feet (3.14 divided by 12)

Remember that changing to a larger diameter cutting tool at the same machine spindle or arbor speed increases the surface feet per minute rim speed of the tool. Never make assumptions as to any machine motor rpm since machines and individual motors can be modified. **WITHOUT ANY CUTTING TOOLS MOUNTED ON THE MACHINE,** check the rpm of each motor using an rpm tachometer. Once the cutting tool diameter and motor rpm are known, you can check Chart A (following) to see if a saw blade will be operating within the 18,000 surface feet per minute maximum rim speed specified. For diameters not covered by Chart A, use the sfm (surface feet per minute) formula above. For the circular sawing of magnesium, copper, lead, brass, or bronze, note the **LOWER** surface speed limitations on Chart B. For harder or more difficult to cut materials, consult the tool manufacturer.

CHART A

18,000 SFM (SURFACE FEET PER MINUTE) MAXIMUM RPM ROTATING SPEEDS FOR CARBIDE TIPPED CIRCULAR SAW BLADES TYPICAL OF COMMERCIAL DESIGN, THICKNESS AND GRADE STANDARDS
(DO NOT OPERATE CARBIDE TIPPED CIRCULAR SAW BLADES ABOVE THE RPM ROTATING SPEEDS SHOWN)

SAW DIA. (INCHES)	MAXIMUM RPM	SAW DIA. (INCHES)	MAXIMUM RPM	SAW DIA. (INCHES)	MAXIMUM RPM
6	11538*	24	2885	44	1573
7	9890*	26	2663	46	1506
8	8654*	28	2473	48	1442
10	6923*	30	2308	50	1385
12	5769*	32	2163	52	1331
14	4945*	34	2036	54	1282
16	4327*	36	1923	56	1236
18	3846*	38	1822	58	1194
20	3461	40	1731	60	1154
22	3147	42	1648		

*Operation of saw blades in excess of 3600 RPM is not recommended and will generally result in poor tool life and cut quality.

Note: Most materials will cut better with longer tool life at speeds well below the maximum RPM rotating speed.

CHART B

MAXIMUM RIM SPEEDS, IN SURFACE FEET PER MINUTE (SFM), FOR CARBIDE TIPPED CIRCULAR SAW BLADES CUTTING THE MATERIALS LISTED BELOW

MAGNESIUM	COPPER	LEAD	UNDER 150 BRINELL BRASS	UNDER 150 BRINELL BRONZE
15,000 SFM	10,000 SFM	14,000 SFM	10,000 SFM	12,000 SFM

SOFT & MEDIUM-HARD ALUMINUM	HARD, ANODIZED ALUMINUM	Note: Most metals, including those listed, will cut better with longer tool life at speeds below the maximum surface feet per minute (sfm) rim speeds.
18,000 SFM	12,000 SFM	

3. Mounting a saw blade to "wobble" means to shim the blade body unequally on one side, throwing the saw out of alignment with the arbor. This causes the saw to make a wider cut and dangerously increases pressures on the tool.

4. "All cracked saws shall be removed from service," Department of Labor OSHA Standards, Federal Register 29 CFR Part 1910.213(S) (7)

5. The term "surface feet per minute" refers to the peripheral or rim speed of a cutting tool. See "Operating Speeds for Carbide Tipped Rotary Cutting Tools" below.

6. Toughness is the resistance of a material to being cut or the strength of a material to resist tearing or breaking.

7. Density is the compactness of a material compared to its volume.

Whirlwind Inc. Return Authorization Policy

No returns will be accepted by Whirlwind Inc. without a return authorization number. A return number will be assigned by the Inside Sales Desk. No other person is to issue return authorization numbers. This number **MUST** appear on the shipping label and all associated paperwork. Shipments which do not have a Return Authorization Number will be refused.

After a Return Authorization Number has been issued, the customer may return the defective part for warranty **consideration**. Just because a part is returned does not guarantee that it will be replaced under warranty. A credit will only be issued after the item is examined and the Plant Superintendent or a company official **approves the credit**.

Any parts which are sent out as warranty replacements will be billed at the normal rate. Price of the part will be credited to the customer when the part is returned to Whirlwind Inc. and if the part is deemed as being under warranty. All **freight costs** are the **responsibility of the customer**. Any signs of abuse, misuse etc. will void any warranty claim. If parts are not returned within 30 days from date of return authorization, Whirlwind Inc. will require the invoice to be paid in full. **There will be no exceptions.**

Failure to pay an invoice for warranty claims which have been denied, when parts were not returned, or for freight will result in a shipping hold on future orders. We are **extremely** liberal on our warranty and will appreciate your cooperation with this policy.

Features

- The pre-assembled two-hand control enclosure occupies both hands of an operator by requiring nearly simultaneous operation of two pushbuttons
- Poppet – snap-acting (no spools)
- Same air as in cylinders – Filtration: 40 micron
- No lubrication required

General Characteristics

Operating Pressure:

40 to 120 PSI (3 to 8 bar)

Permissible Fluids:

Air or neutral gas 40 micron filtration, lubricated or dry

Flow at 90 PSI (6 bar):

7 SCFM (200 l/mn ANR)

Operating Temperature:

-5°F to 140°F (-15°C to 60°C)

Below 40°F (5°C), an air dryer is required

Storage Temperature:

-40°F to 160°F (-40°C to 70°C)

Number of operations with dry air at 90 PSI (6 bar), 68°F (20°C), frequency 1 Hz:

1 Million Operations

Vibration resistance:

Conforms to section 19-2 of bureau Véritas regulations (November 1987)

Materials:

Body: glass filled nylon

Operating head: zinc alloy and plastic

Connections:

5/32" instant

Mounting

Approvals:

- In accordance with European Standard EN 574 - September 1996
- Conforms to the model that has obtained CE Type Test Certificate No. 02526 520 4631 0397

Operation

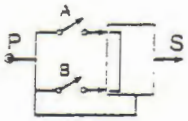

- Output "S" will appear only if "A" and "B" are simultaneously operated (within .5 seconds or less of each other).
- If the operator actuates only one pushbutton, either "A" or "B", or if both "A" and "B" are actuated but at an interval greater than .5 seconds, output "S" will not appear.
- Output "S" is regenerated by supply "P". Output "S" will therefore disappear if supply "P" is cut off.
- Output "S" will disappear if either "A" or "B" is released.

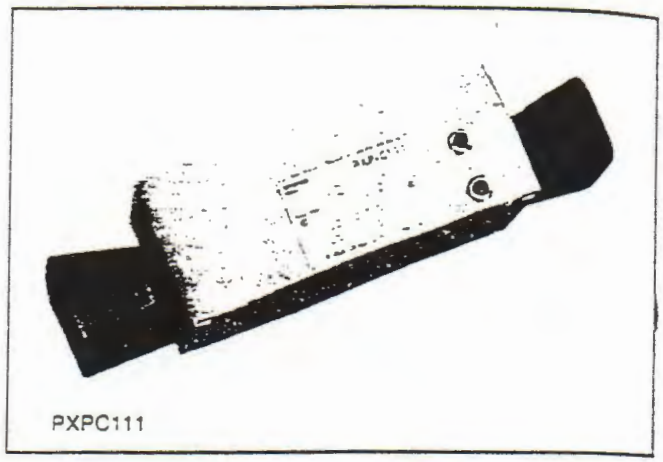

PXPC111

- If output "S" disappears for any reason, "A" and "B" must be nearly simultaneously actuated to again provide output "S".
- Since output "S" is regenerated it appears sharply, at full force (snap-acting), and is quickly exhausted upon deactivation. In addition the module is not affected by the length or diameter of tubing used for output "S".

⚠ WARNING

These devices should NOT be used in any application involving rotary clutch presses. Two hand control modules do not of themselves insure the safety of any machine. Users and original equipment manufacturers are responsible for making sure that installations meet all relevant safety regulations.

Model Number
PXPC111

Dimensions

Inches (mm)

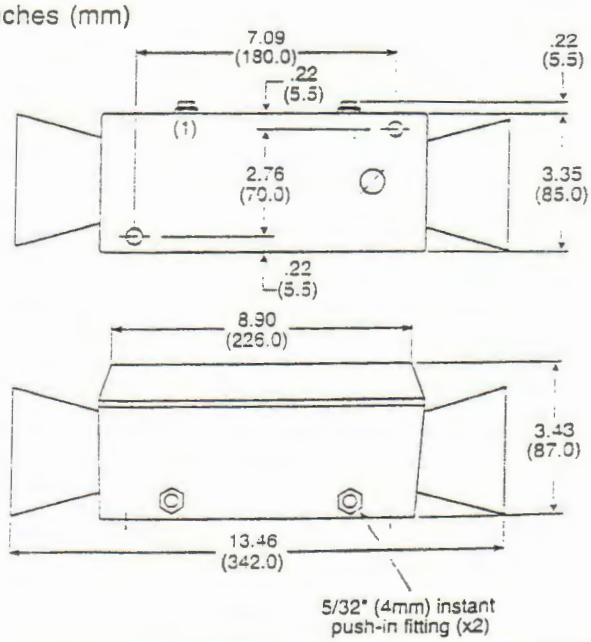

MADE WITH PRIDE IN THE USA!

MODEL 216 SEMI-AUTOMATIC CUT-OFF SAW

USED BY: The five largest furniture manufacturers and the five largest cabinet companies all use Whirlwind machines. Our saws are also used by some of the largest R.V. companies, aerospace companies and boat makers. Dimension plants and packaging companies have also saved time and improved their products with Whirlwind cut-off saws. Large OR small, if your company needs square cut lumber, non-ferrous metals or plastics and you're looking for ways to cut costs, give us a call.

SPEED: The Whirlwind Model 216 saw is designed to run at approximately 30 – 40 cycles per minute. Each cycle is cushioned by a heavy duty shock absorber. The cycle speed can be easily adjusted using a slotted screwdriver. Lock nuts securely hold screws in place after adjustment.

SAFETY: The Whirlwind Model 216 is an under-cut style saw. That means the blade remains in the heavy steel base until the cut is made. The cast aluminum guard / clamp holds the material in place throughout the cutting cycle. This protects the operator from kick-back and flying debris. Cast iron is used for the table top so we can provide a recessed area for the operator's hands. The raised lip between this recessed area and the blade acts as a barrier. The operator's hands should always remain in the recessed area, with palms up, while handling material. A front shield, air hose, double palm buttons and other safety devices are all standard equipment on the model 216.

WARNING: NEVER PLACE YOUR FINGERS UNDER THE GUARD/CLAMP.

ACCURACY: The Whirlwind Model 216 is manufactured using the latest C.N.C. machinery. The model 216 is a further refinement of a well proven design. Whirlwind saws are renowned for their exceptional accuracy. The model 216 certainly continues that tradition. Nothing but the finest components and raw materials are used in Whirlwind saws. Things like chrome-moly spindles and heavy steel spindle housings keep Whirlwind saws accurate for years. We also run each and every Whirlwind machine for 4 hours prior to shipment. This sort of attention to detail keeps Whirlwind at the top!

CAPACITY: The Whirlwind Model 216 will cut full dimension 1" x 18", 2" x 16", 3" x 14", 4" x 12", 5" x 10" & 6" x 8". Various fence configurations are required to cut all of these sizes.

POWER: A 10 H.P. Baldor T.E.F.C. motor is standard equipment on the model 216. The 3,450 R.P.M. motor can be wired in your choice of 208 / 230 / 460 volt 3 phase. A magnetic starter with overload protection and low voltage controls is also standard equipment. Other voltages are also available. Call us with your requirements.

SIZE: Overall dimensions are 26 inches wide by 33 1/2 inches deep. The table height is 36 3/4 inches. The model 216 weighs 690 pounds.

C.F.M.: Approximately 1.96 C.F.M. usage at normal operating speeds. 90 P.S.I. of compressed air is required to operate the model 216.

MISCELLANEOUS: The model 216 uses a 20" x 1" bore blade. Blades are not included. A 4" dust chute is supplied with the machine. Approximately 500 C.F.M. should be provided for dust collection. The model 216 is made with pride in the U.S.A.!

CUTTING CYCLE: Each cutting cycle is composed of 4 steps. You must adjust the guard / clamp to within approximately 1/4" of material prior to using the saw.

1. Guard/clamp comes down and holds material in place.
2. After material is clamped, blade comes up and makes the cut.
3. After cut is complete, blade drops below table.
4. Guard/clamp then releases material.

SAFETY NOTE: The cutting cycle can be quickly reversed by removing one or both hands from the palm buttons.

SPECIAL USES: Many major corporations have discovered how well Whirlwind saws work on aluminum, copper, brass, P.V.C. and other materials. We even have a customer cutting brake lining material! Saws for cutting non-ferrous metal or plastics should be ordered with a spray mist attachment. Call us with your special sawing requirements. After all, "We wrote the book on cut-off saws."

WHIRLWIND

4302 SHILLING WAY • DALLAS, TEXAS 75237 • TEL. (214) 330-9141 • FAX (214) 337-9572
www.whirlwindsaws.com

R040805